PCCG-400

(NO FABRICATED LOAD OPTION)

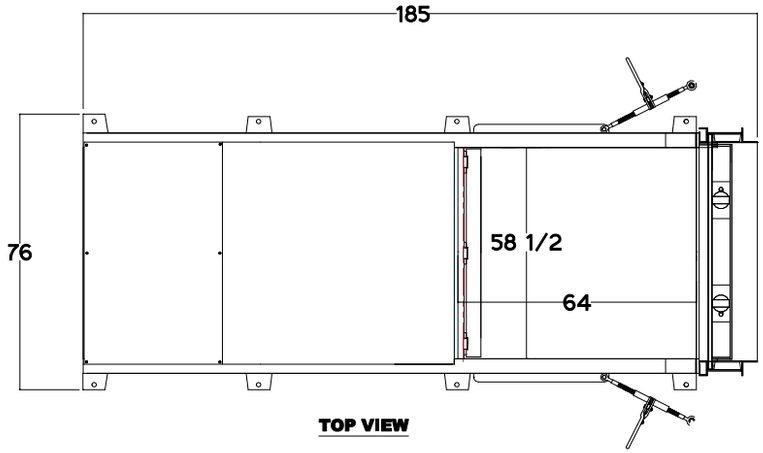

TOP VIEW

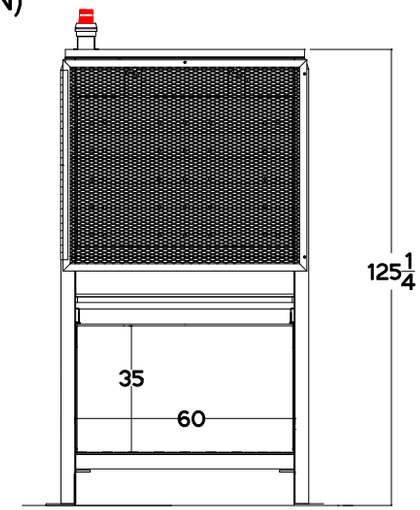

FRONT VIEW

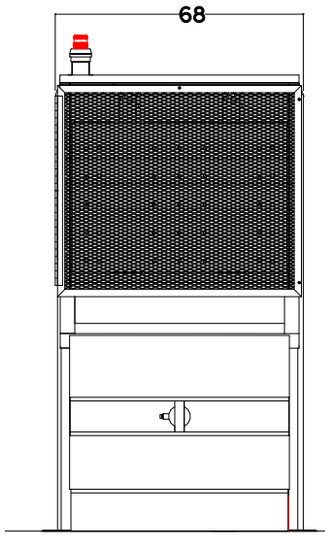

REAR VIEW

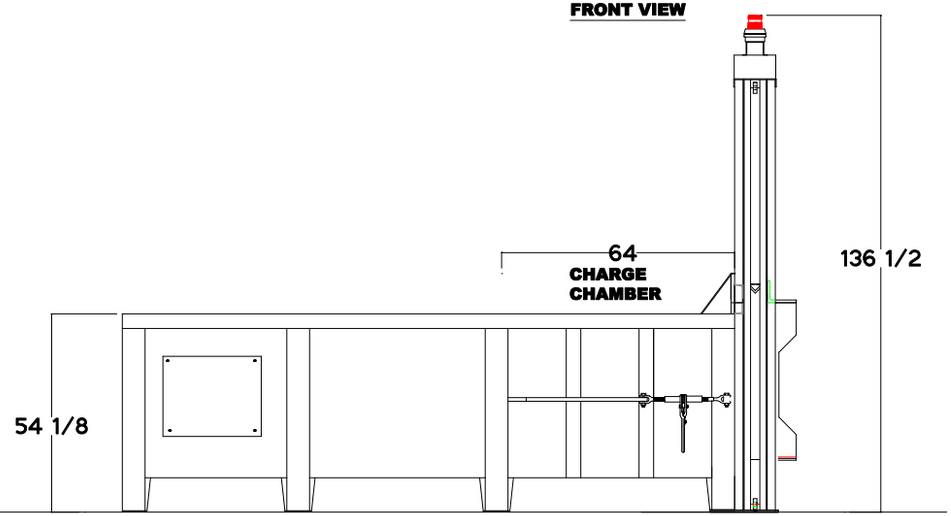

SIDE VIEW

NOTE: DIMENSIONS ARE NOMINAL. THEY ARE A CLOSE REPRESENTATION OF ACTUAL WELDED ASSEMBLIES AND MAY CHANGE WITHOUT NOTICE.

DESCRIPTION: PCCG-400 PRECRUSHER

FLEETGENIUS™ COMPACTORS
LENOIR, NORTH CAROLINA 28645

THIS DRAWING CONTAINS CONFIDENTIAL & PROPRIETARY INFORMATION AND SHALL NOT BE DISCLOSED OR COPIED WITHOUT THE EXPRESSED, WRITTEN PERMISSION OF FLEETGENIUS, LLC.

DRAWN BY:	M.CARLIN	DATE	11/21/15
APPROVED BY:		DATE	
		PAGE	1
FILE NAME	PCCG400-001-S	REV.	