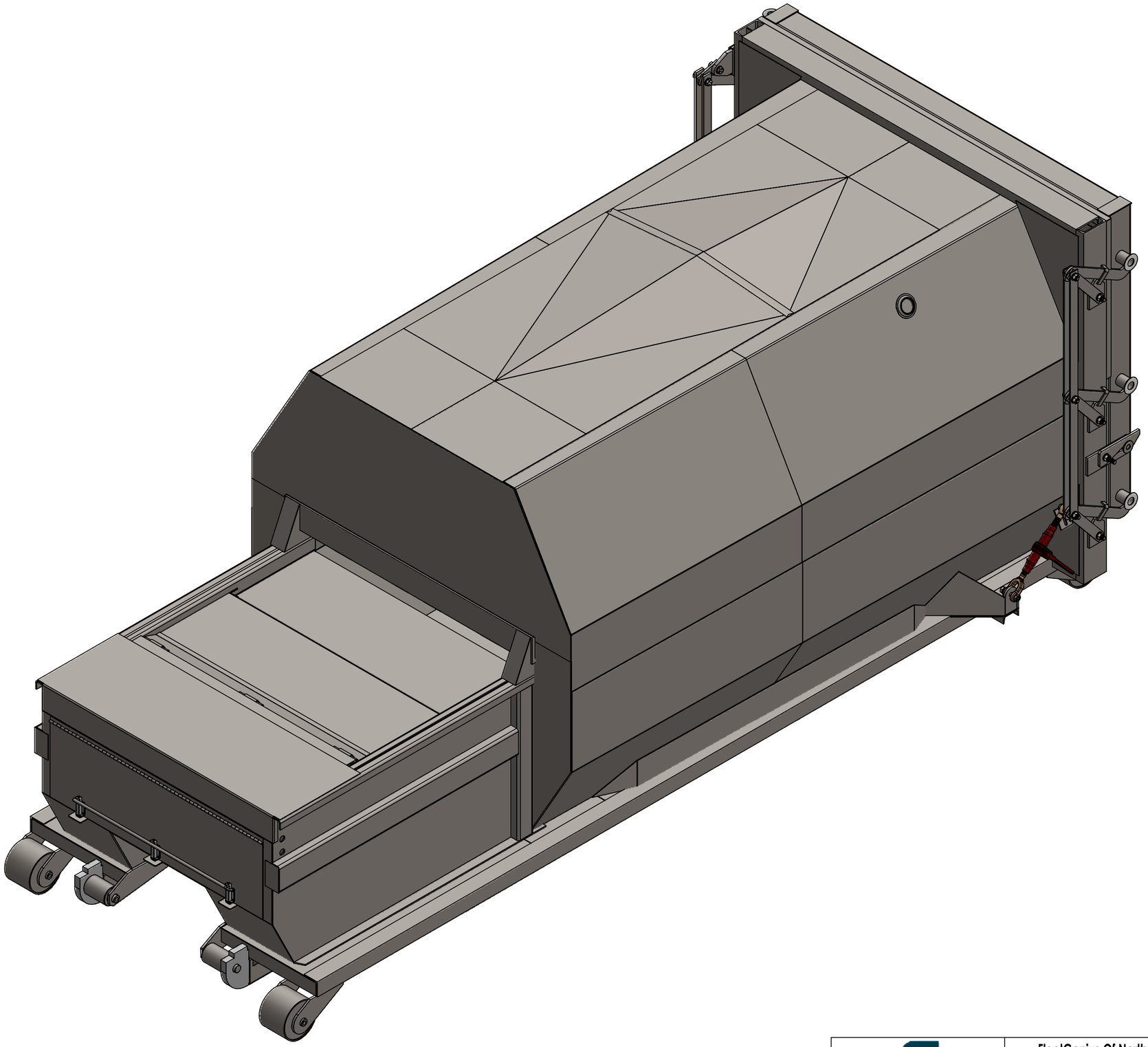

FLEETGENIUS™

FleetGenius Of North Carolina
1808 Norwood St SW
Lenoir, NC 28645

TITLE: SC-20 ASSEMBLY

PROPRIETARY AND CONFIDENTIAL
THE INFORMATION CONTAINED IN THIS DRAWING IS THE SOLE PROPERTY OF BAKERS WASTE EQUIPMENT, INC. ANY REPRODUCTION IN PART OR AS A WHOLE WITHOUT THE WRITTEN PERMISSION OF BAKERS WASTE EQUIPMENT, INC IS PROHIBITED.

UNLESS OTHERWISE SPECIFIED:
DIMENSIONS ARE IN INCHES TOLERANCES:
FRACTIONAL +0, -1/16"
BEND ± 2°

	NAME	DATE
DRAWN		
CHECKED		
MATERIAL		

SIZE: C
DWG. NO.: TL-000001129
REV:
SCALE: 1:15
WEIGHT: 7977
SHEET 1 OF 3

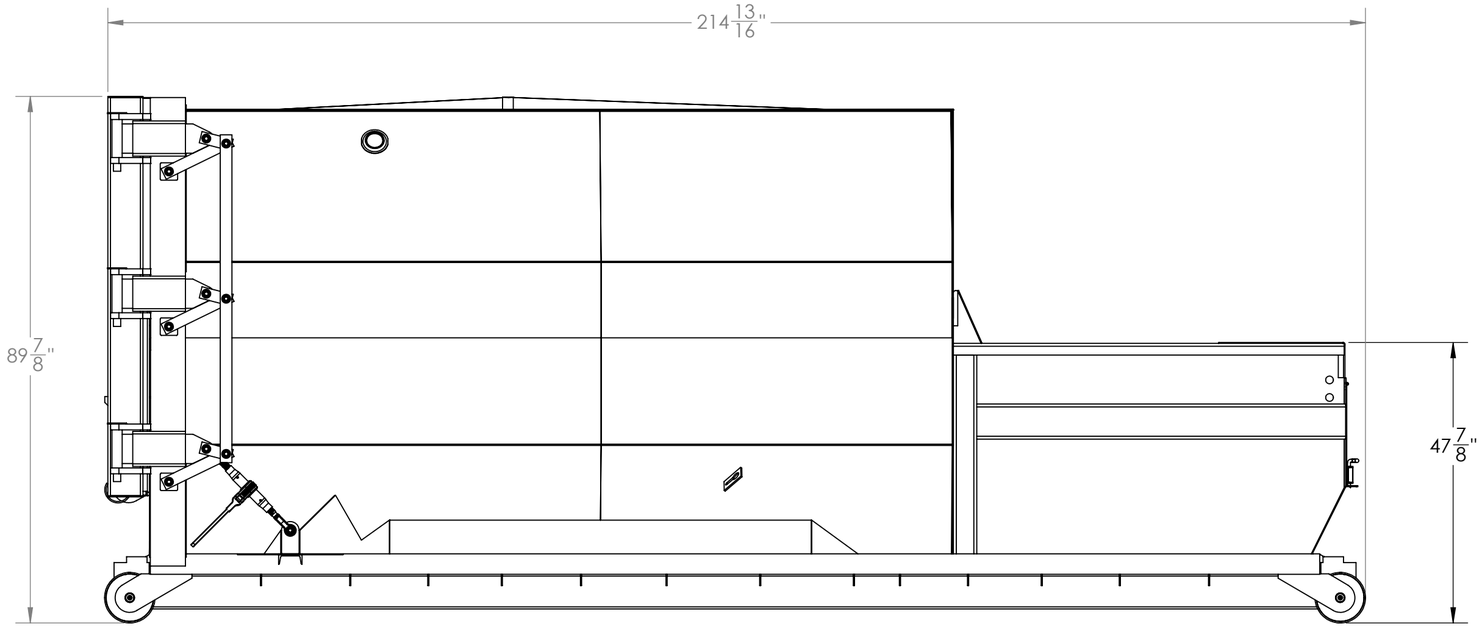

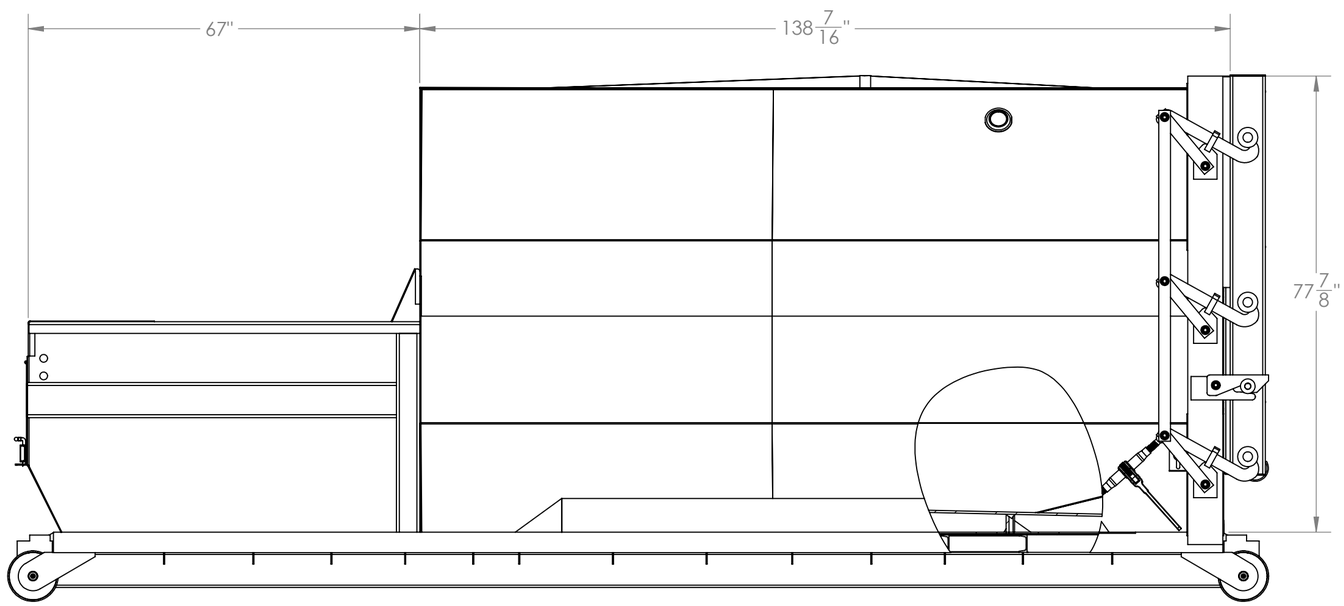

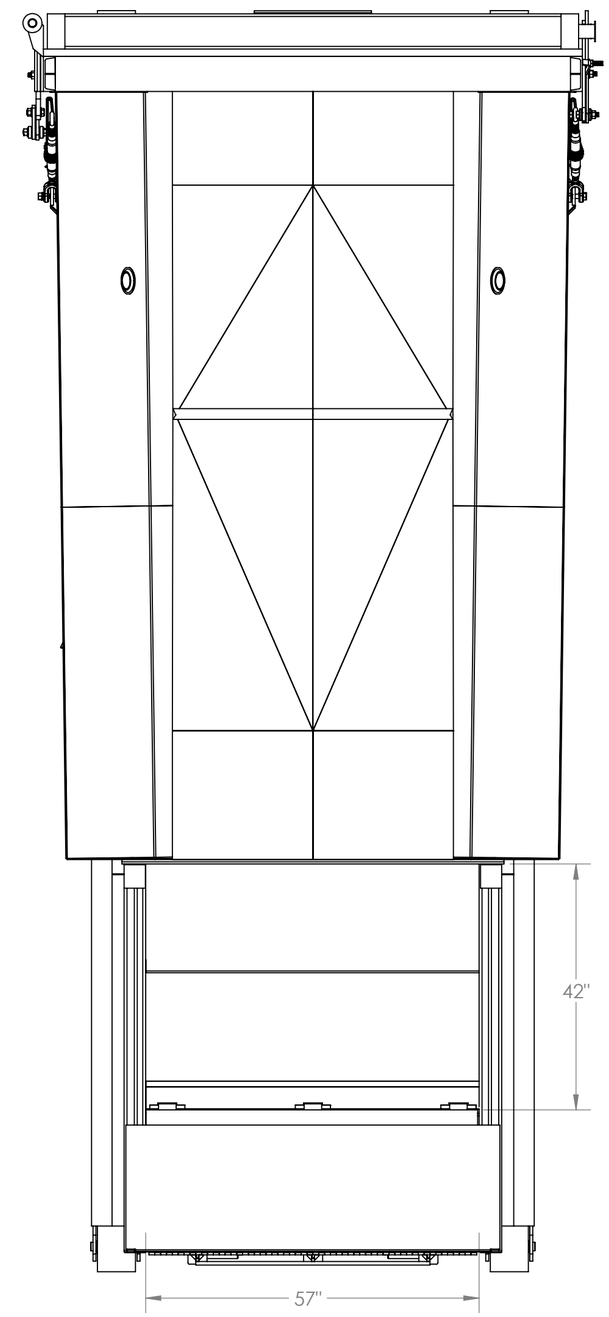

CHARGE CHAMBER DIMENSIONS

FLEETGENIUS™

FleetGenius Of North Carolina
1808 Norwood St SW
Lenoir, NC 28645

TITLE: SC-20 ASSEMBLY

PROPRIETARY AND CONFIDENTIAL
THE INFORMATION CONTAINED IN THIS DRAWING IS THE SOLE PROPERTY OF BAKERS WASTE EQUIPMENT, INC. ANY REPRODUCTION IN PART OR AS A WHOLE WITHOUT THE WRITTEN PERMISSION OF BAKERS WASTE EQUIPMENT, INC IS PROHIBITED.

UNLESS OTHERWISE SPECIFIED:
DIMENSIONS ARE IN INCHES TOLERANCES:
FRACTIONAL +0, -1/16"
BEND ± 2°

	NAME	DATE
DRAWN		
CHECKED		
MATERIAL		

SIZE: C
DWG. NO.: TL-000001129
REV:
SCALE: 1:20
WEIGHT: 7977
SHEET 2 OF 3

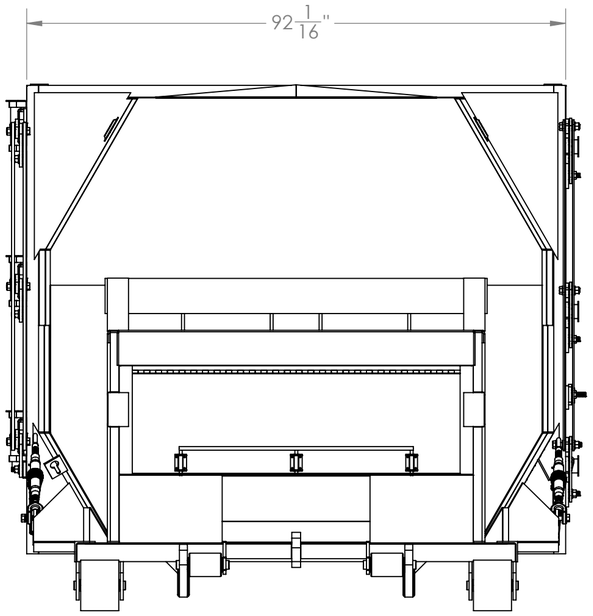

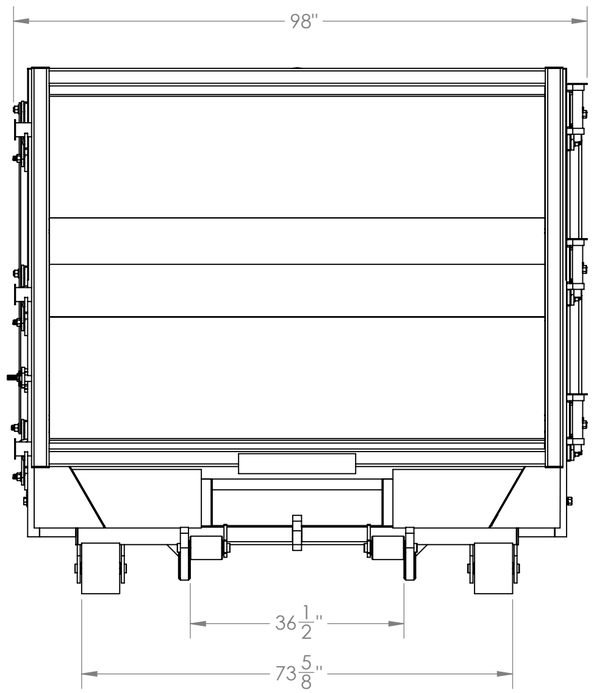

COMPONENTS HIDDEN FOR CLARITY

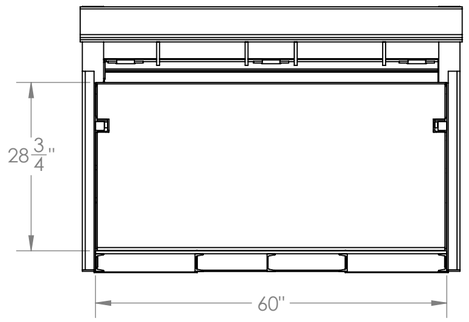

DISCHARGE CHAMBER DIMENSIONS

FLEETGENIUS™

FleetGenius Of North Carolina
1808 Norwood St SW
Lenoir, NC 28645

TITLE: SC-20 ASSEMBLY

PROPRIETARY AND CONFIDENTIAL
THE INFORMATION CONTAINED IN THIS DRAWING IS THE SOLE PROPERTY OF BAKERS WASTE EQUIPMENT, INC. ANY REPRODUCTION IN PART OR AS A WHOLE WITHOUT THE WRITTEN PERMISSION OF BAKERS WASTE EQUIPMENT, INC IS PROHIBITED.

UNLESS OTHERWISE SPECIFIED:
DIMENSIONS ARE IN INCHES TOLERANCES:
FRACTIONAL +0, -1/16"
BEND ± 2°

	NAME	DATE
DRAWN		
CHECKED		
MATERIAL		

SIZE: C
DWG. NO.: TL-000001129
REV:
SCALE: 1:20
WEIGHT: 7977
SHEET 3 OF 3